Santa Cruz Industrial Lead
Supplemental Structural Assessment Report

Santa Cruz County Regional Transportation Commission

Prepared By:

HNTB

June 23, 2006

HNTB Contract No. 42896

This report has been prepared for:

Santa Cruz County Regional Transportation Commission
1523 Pacific Avenue
Santa Cruz, CA 95060-3911

Kenneth Patrick Casey, P.E.
HNTB Corporation
1330 Broadway, Suite 1630
Oakland, CA 94612
(510) 208-4599
(510) 208-4595 (Fax)

June 23, 2006
Date

This Structural Assessment Report has been prepared under the direction of a registered civil engineer. The registered civil engineer attests to the technical information contained herein and the engineering data upon which recommendations, conclusions, and decisions are based. Because these assessments and estimates may not be verifiable without more extensive testing and inspection, or destroying adequate or serviceable elements of the structures, any report provided by HNTB Corporation will be based on HNTB's experience and professional opinion. HNTB does not warrant or guarantee that it has discovered or identified all conditions.

TABLE OF CONTENTS

INDEX OF TABLES

INDEX OF FIGURES

APPENDICIES

Appendices A - G contain information provided by Union Pacific Railroad and covered under a confidentiality agreement between Union Pacific Railroad Company and the Santa Cruz County Regional Transportation Commission; therefore, they are in a separate confidential volume. Appendix H is attached.

1. Executive Summary

This Supplemental Structural Assessment Report has been prepared for the Santa Cruz County Regional Transportation Commission (SCCRTC) to provide a structural assessment of selected structures on the Santa Cruz Industrial Lead. SCCRTC is considering purchasing the 32-mile Santa Cruz Industrial Lead from Union Pacific Railroad (UPRR). This Supplemental Structural Assessment Report supplements previously completed structural assessments completed by other consultants in July 2005[1] and August 2005[2], herein referred to as July 2005 Structural Assessment and August 2005 La Selva Trestle Supplemental Report, respectively.

The July 2005 Structural Assessment and August 2005 La Selva Trestle Supplemental Reports highlighted specific structures that were in need of additional structural assessment "due to a Poor Condition Rating, advanced age of the structure, importance/visibility of the structure, and/or potentially high capital and maintenance costs of the structure"[3]. The purpose of this Supplemental Structural Assessment Report is to present findings from HNTB's structural assessment of those specific structures.

Summary of Structure Condition

Based on the comparison of the calculated bridge load ratings and the equivalent ratings for the equipment used on this line, the current freight service over all of the bridges in this report can remain at current levels. For the Capitola Crossing bridge at MP 15.89c, the current operating speed of 10 mph should be retained due to the equipment load rating exceeding the Normal Load rating of the bridge. Detailed information about the load ratings is described in Section 7 of this report.

Summary of Recommended Repair Work and Costs

Table 1 summarizes the recommended repair work, estimated construction cost of repair work, and other "soft" project costs. Estimates of the annual costs for maintenance are described in the Preliminary Cost Estimate section of this report.

[1] Santa Cruz Branch Line Structural Assessment, Draft Volume 1, July 2005, by Biggs Cardosa Associates, Inc.
[2] Santa Cruz Branch Line Structural Assessment, La Selva Trestle (MP 9.09) Supplemental Report, August 2005, by Biggs Cardosa Associates, Inc.
[3] Footnote 1, p. 8-1

Location (Bridge No./ Milepost)	Structure Length	Recommended Repair Work	Estimated Construction Cost of Recommended Repair Work	Other Project Costs
MP 1.06b Pajaro River Crossing – Steel Through Plate Girder	300 ft	• Clean bearings • Repair holes in girder webs	$30,000 - $36,000	$12,000 - $14,000
MP 9.09 La Selva Beach Trestle (Leonard Gulch) – Steel Deck Girder	340 ft	• General repairs to columns to fix areas of significant section loss • Repairs to Bent 4 columns • Repairs to Bent 2 columns • Replace severely corroded longitudinal bracing for selected members at Bents 3-4, Bents 5-6, and Bents 7-8 • Replace severely corroded transverse bracing members at selected Bents • Replace severely corroded lacing bars in selected columns • Replace selected girder bottom laterals and connection plates • Replace selected girder top laterals and connection plates • Replace selected girder cross frames • Repair girder bottom flanges and webs where corrosion occurs at cross frames and bearings • Replace selected corroded rivets, bolts, etc.	$816,000 - $1,156,000	$320,000 - $450,000

Location (Bridge No./ Milepost)	Structure Length	Recommended Repair Work	Estimated Construction Cost of Recommended Repair Work	Other Project Costs
MP 10.45 Seascape Trestle – 15 span Ballast Deck Timber Trestle	240 ft	• Replace or splice deteriorated piles (4 locations) • Replace selected deteriorated stringers and hardware (4 each) • Replace selected severely deteriorated longitudinal braces and hardware (45% of total) • Replace selected severely deteriorated transverse braces and hardware (40% of total)	$120,000 - $192,000	$47,000 - $75,000
MP 15.89a Capitola Crossing – Prestressed Concrete Box Girder	120 ft	• Inspect and clean bearings	$4,000 - $7,000	$2,000 - $3,000
MP 15.89b Capitola Crossing – 16 span Open Deck Timber Trestle	215 ft	• Replace selected deteriorated stringers (4 each) • Replace or splice selected deteriorated piles (1 splice) • Replace selected deteriorated bracing and hardware (20%) • Replace missing sill plate hardware	$43,000 - $69,000	$17,000 - $27,000
MP 15.89c Capitola Crossing – Steel Pinned Deck Truss	148 ft	• Clean and repair bearings, rollers, anchor bolts (4 each) • Replace missing or broken fasteners in girder cross frames and laterals • Repair corrosion in selected top chord members	$89,000 - $126,000	$35,000 - $49,000

Location (Bridge No./ Milepost)	Structure Length	Recommended Repair Work	Estimated Construction Cost of Recommended Repair Work	Other Project Costs
MP 15.89d Capitola Crossing – 3 span Open Deck Timber Trestle	40 ft	• Replace deteriorated/missing bracing to concrete pier • Replace selected transverse bracing and hardware • Replace selected damaged stringers (2 each)	$14,000 - $22,000	$6,000 - $9,000
MP 15.89e Capitola Crossing – Prestressed Concrete Trough	60 ft	• Inspect and clean bridge bearings • Modify superstructure drainage	$3,000 - $4,000	$1,000 – $1,500
MP 19.43a San Lorenzo River – Steel Through Warren Truss	240 ft	• Repair or replace bearings/anchor bolts Pier 2 and Pier 3 • Repair broken cap stone at Pier 3 • Replace selected bottom lateral bracing and connections to truss • Clean out debris from selected lower chord members and gusset plates, re-inspect for corrosion and section loss • Replace lacing bars in selected columns • Replace selected corroded walkway support members for adjacent pedestrian walkway • Repair floor beam web corrosion at stringer connections	$192,000 - $288,000	$75,000 - $112,000

Location (Bridge No./ Milepost)	Structure Length	Recommended Repair Work	Estimated Construction Cost of Recommended Repair Work	Other Project Costs
MP 19.43b San Lorenzo River – Steel Deck Girder	60 ft	• Inspect and clean bearings • Replace anchor bolt at Pier 3 • Replace walkway girder bearing at Pier 3	$24,000 - $29,000	$9,000 - $11,000
MP 23.54 Meder Creek Crossing – Open Deck Timber Trestle	16 ft	• Replace stringer (1)	$8,000 - $13,000	$3,000 - $5,000
MP 4.45 Retaining Wall	275 ft	• None	$0	$0
MP 8.64 Retaining Walls	340 ft	• Replace approximately 260 lf of retaining wall • Restore proper drainage along track roadbed	$40,000- $55,000	$16,000 - $22,000
MP 9.3 Retaining Wall	170 ft	• None	$0	$0
		TOTALS	$1,383,000 - $1,997,000	$543,000 - $778,500

Table 1 - Summary of Recommended Repair Work, Estimated Construction Cost of Repair Work, and Other Project Costs

Table Notes:

1. The level of detail provided is consistent with the programming planning purposes of this Supplemental Structural Assessment Report. All costs should be considered as engineer's opinion of probable costs and subject to change. Actual incurred costs may vary.

2. Costs are stated in 2006 dollars and have not been adjusted for inflation, or escalated to date of expenditure.
3. Costs are based on present conditions and no allowances are included in anticipation of additional deterioration or degradation due to natural or manmade events.
4. Costs do not include any costs for seismic retrofitting of the structures.
5. Other Project Costs are based on a percentage of Estimated Construction Cost of Recommended Repair Work, including mobilization/demobilization (10%), design engineering (12%), construction management (12%), and project reserve (5%).

2. Introduction

HNTB has prepared this Supplemental Structural Assessment Report for the Santa Cruz County Regional Transportation Commission (SCCRTC) with the objective of providing SCCRTC with an assessment of structure condition, load carrying capacity, repair and maintenance costs, and general recommendations for selected bridge and wall structures along the Santa Cruz Industrial Lead.

In general, HNTB's scope of services for SCCRTC covers:

- Data collection and document review of information provided by SCCRTC and UPRR related to the bridge structures. Relevant documents include as-built bridge plans and record drawings, information from the UPRR bridge books, information from UPRR bridge inspections, prior inspection records from other consultants, and prior structural assessment reports from other consultants
- Field investigation of bridge structures and wall structures to document condition of representative bridge and wall members, preparation of field investigation notes, and photographing structures
- Performing bridge service load analyses for the bridges to determine operating service loads
- Performing a seismic vulnerability study of the San Lorenzo Crossing to identify seismic vulnerabilities, developing preliminary retrofit concepts, and developing conceptual costs for retrofit concepts

For the purposes of the assessment, the structures are categorized into one of four categories; Steel Bridges, Timber Bridges, Concrete Bridges, and Retaining Walls. The structure locations, brief descriptions of the structures, and reason for supplemental structural assessment are listed in the following tables. A description of the physical components of each structure is not included here but can be located in the UPRR Bridge Book and the reports of the Santa Cruz Branch Line Structural Assessment prepared by Biggs Cardosa Associates, Inc.

Summary of Steel Bridges Assessed

Location (Bridge No./ Milepost)	Crossing	Bridge Type and Year Built	Reason for Supplemental Assessment from Previous Report
MP 1.06b	Pajaro River Crossing	5-span Through Plate Girder – 1906	Important river crossing with potentially high rehabilitation cost
MP 9.09	Leonard Gulch (La Selva Beach Trestle)	9-span Deck Plate Girder – 1927	A Critical condition rating and important crossing with potentially high rehabilitation cost

Location (Bridge No./ Milepost)	Crossing	Bridge Type and Year Built	Reason for Supplemental Assessment from Previous Report
MP15.89c	Capitola Crossing	1-span Deck Truss, Pinned – 1903	Important river crossing located in a historic district
MP 19.43a	San Lorenzo River Crossing	2-span Through Truss, Warren type - 1904	A Poor condition rating important river crossing with potentially high rehabilitation cost
MP 19.43b	San Lorenzo River Crossing	1-span Deck Plate Girder – 1904	A Poor condition rating and important river crossing with potentially high rehabilitation cost

Table 2 - Summary of Steel Bridges Assessed

Figure 1 - MP 1.06b Pajaro River Crossing

Figure 2 - MP 9.09 Leonard Gulch (La Selva Beach Trestle)

Figure 3 - MP 15.89c Capitola Crossing

Figure 4 - MP 19.43a San Lorenzo River Crossing

Figure 5 - MP 19.43b San Lorenzo River Crossing

Summary of Timber Bridges Assessed

Location (Bridge No./ Milepost)	Crossing	Bridge Type and Year Built	Reason for Supplemental Assessment from Previous Report
MP 10.45	Seascape Trestle	16-span ballasted deck timber stringer – 1928	A Poor condition rating
MP 15.89b	Adjacent to Capitola Avenue	15-span open deck timber stringer – 1904	Important river crossing
MP 15.89d	Adjacent to Wharf Road	3-span open deck timber stringer – 1904	Important river crossing
MP 23.54	Meder Creek	1-span open deck timber stringer – 1913	A Poor condition rating

Table 3 - Summary of Timber Bridges Assessed

Figure 6 - MP 10.45 Seascape Trestle

Figure 7 - MP 15.89b Adjacent to Capitola Avenue (Capitola Crossing)

Figure 8 - MP 15.89d Adjacent to Wharf Road (Capitola Crossing)

Figure 9 - MP 23.54 Meder Creek

Summary of Concrete Bridges Assessed

Location (Milepost)	Crossing	Bridge Type and Year Built	Reason for Supplemental Assessment from Previous Report
MP 15.89a	Capitola Avenue	3-span Prestressed concrete box girder - 1970	Important highway and river crossing
MP 15.89e	Wharf Road	1-span Prestressed concrete trough - 1971	Important highway and river crossing

Table 4 - Summary of Concrete Bridges Assessed

Figure 10 - MP 15.89a Capitola Avenue (Capitola Crossing)

Figure 11 - MP 15.89e Wharf Road (Capitola Crossing)

Summary of Retaining Walls Assessed

Location (Milepost)	Approx. Length	Wall Type	Reason for Supplemental Assessment from Previous Report
Between MP 4.45 and MP 4.87	275'	Steel soldier pile with timber lagging	Not previously inspected
Between MP 8.64 and MP 9.09	340'	Steel rail pile and timber lagging	Risk to operations if local failure occurs
North of Leonard Gulch (La Selva Trestle, MP 9.3)	170'	Timber crib wall	Not previously inspected

Table 5 - Summary of Retaining Walls Assessed

Figure 12 – Wall Between MP 4.45 and MP 4.87

Figure 13 – Wall Between MP 8.64 and MP 9.09

Figure 14 – Wall North of Leonard Gulch (MP 9.3)

3. Background

Union Pacific Railroad and the SCCRTC have entered into negotiations covering the possible purchase by the SCCRTC from Union Pacific Railroad of the 32-mile line of railroad known as the Santa Cruz Industrial Lead extending between Milepost 0.433 at Salinas Road and Milepost 31.39 at Davenport.

Union Pacific Railroad currently provides freight service on the line. The SCCRTC wishes to continue the freight operation on the line and intends to contract with a short line operator for continued freight operation on the Santa Cruz Industrial Lead. In addition, SCCRTC may use the line for multi-purpose transportation.

4. Project Need and Purpose

This Supplemental Structural Assessment Report is intended to provide a pre-acquisition structural assessment of structures that have previously been identified by others as in poor or critical condition, are important crossings, or have the potential for a high capital or maintenance cost. This Supplemental Structural Assessment Report is one of several due diligence investigations SCCRTC is conducting or has conducted prior to acquisition of the Santa Cruz Industrial Lead from UPRR.

The primary objective of this report is to provide SCCRTC with the following information:

- Whether to continue the current freight service operations at current levels on each bridge structure
- Whether to limit the freight service operations on each bridge to load levels below the load rating determined by the detailed structural assessment
- Whether to rehabilitate, reconstruct or replace existing structure elements to increase the structure service load rating above anticipated freight operation requirements
- Planning level cost estimates for near term and long term repair or rehabilitation cost of each structure and the recurring annual maintenance of each structure
- Estimated service life of each structure, provided that recommended repairs are made

5. Data Collection and Review

Confidential UPRR Information

Information about the bridge structures and industrial lead usage was provided to HNTB by UPRR, and is deemed to be Confidential Information under the Confidentiality Agreement between UPRR and SCCRTC, dated June 1, 2005. HNTB is prohibited from referring to the substance of the confidential information in this Supplemental Structural Assessment Report. HNTB may in this report on the structures list by name any such information provided by UPRR and state that the report is based, in part, on its review of such information. This limitation on the confidentiality of the information has not affected the conclusions developed for the report.

Confidential Information Provided by UPRR:

1. As Built Structural Plans for structures at MP 1.06b, MP 9.09, MP 15.89a, MP 15.89c, MP 15.89e, MP 19.43a and MP 19.43b.
2. Bridge Book Inspection Records: 22 page data printout of UPRR inspection records for bridges
3. Structures Abbreviations and Substructure Descriptions: 2 pages from UPRR 2004 Engineering Structures Maintenance Field Manual Sections 1.11.18 and 1.11.19 listing typical abbreviations
4. Diagram of Structure Description Examples: 1 page from UPRR 2004 Engineering Structures Maintenance Field Manual Section 1.11.10.
5. Condition Rating of Bridges by Modjeski & Masters Inc., October 2004: 1 page spreadsheet for bridges 1.06, 9.09, 15.89, 19.43
6. 2005 Repairs List: 1 page spreadsheet for bridges 1.06, 9.09, 15.89, 19.43, 23.54
7. Santa Cruz Inbound Commodities: 1 page spreadsheet listing car types and tonnage
8. Santa Cruz Outbound Commodities: 1 page spreadsheet listing car types and tonnage

Other Documents Reviewed:

1. Santa Cruz Branch Line Structural Assessment, Draft Volume 1, July 2005, by Biggs Cardosa Associates, Inc.
2. Santa Cruz Branch Line Structural Assessment, La Selva Trestle (MP 9.09) Supplemental Report, August 2005, by Biggs Cardosa Associates, Inc.

Information Not Available:

1. As-built information or record drawings for the timber bridges (MP 10.45, MP 19.43b, MP 19.43d, and MP 23.54)
2. As-built information or record drawings for the retaining walls assessed in this report
3. Geotechnical information

6. Field Inspections

Inspections were performed between March 28, 2006 and April 3, 2006 by an inspection team consisting of three senior HNTB engineers. A flagman from UPRR accompanied the HNTB inspection team to each inspection site and remained on site for the duration of the bridge inspection work.

The inspection team's primary activities included:

- Field visual comparison of the bridges to the as-built record drawings
- Field verification of the UPRR 2005 Repair List and UPRR Bridge Book inspection records
- Photographing bridge and structure elements and areas of special interest
- Recording and documenting bridge conditions and field observations on bridge inspection forms
- Observing the bridges for abnormal deflection/movement under train live load conditions, whenever possible

Excluded Inspection Work:
With the resources available within the scope of this inspection, it was not possible to inventory the condition of each individual structural element. The approach therefore was to inspect a sample of the different members and then assess the overall condition of the bridge using extrapolation for similar member types. The inspections were limited to visual inspections of visible bridge and wall elements, and primarily focused on the main load carrying structural members. In general, other bridge elements such as handrails, walkways, guard timbers, abutment wingwalls, and sheet piling were not inspected or documented. Underground foundations or elements otherwise concealed by the ground were not inspected. Underwater bridge elements were not inspected. Track condition was not inspected. Destructive testing and sampling of materials was not performed. All inspections completed were specific to the scope of work and were performed using professional judgment and no additional inspections are needed for this report. Additional inspections may be required for additional items of work but those have not been designated at this time.

Steel Bridge Inspection:
The inspection of the steel bridges primarily focused on documenting and recording corrosion and material section loss of the primary structural members. Loss of member section from corrosion was estimated by visual inspection and measured with a tape measure. Debris, pack rust, and scale were removed from selected bridge members in order to expose and observe the condition of the members.

Timber Bridges:
The timber piles, pile caps, cross bracing, longitudinal bracing, and stringers were visually inspected for checks, deterioration, splitting, and timber decay. When a member defect was observed by visual inspection the member condition was further investigated

by sounding with a hand held hammer. Core sampling was not performed on any of the bridge members.

Concrete Bridges:
The concrete bridges were visually inspected for cracks, spalling, and exposed reinforcing steel. Bearing pads and seats were inspected to determine overall condition.

Retaining Walls:
The retaining walls were visually inspected for structural member failure, deterioration, ground movement, and rotation or sagging of the retaining wall elements. Walls were measured with a measuring tape to determine approximate wall dimensions.

7. Service Load Analysis

Load Ratings

Rating of existing bridges for carrying capacity is determined by the calculation of stresses based on as-built bridge records and physical condition, including data obtained from field inspection. The intent of the normal rating is to limit the stresses in the bridge structure to within allowable levels.

The current Cooper E design load used by most railroads to design new bridges is the Cooper E 80 loading shown in Figure 15. The Cooper E loading is made up of two locomotives with the main driving wheels producing a maximum 80,000 pound load per axle and followed by a trailing load of 8,000 pound per foot representing the rail cars. Although there is no current equipment that matches this configuration it is the most common loading configuration used in the design of new railroad bridges. Other Cooper E design loads have been use in the past with the axle spacing remaining similar. As an example a Cooper E 72 loading would have the main driving axles producing 72,000 pounds and the other axle loadings and trailing load would be based on the ratio of the difference.

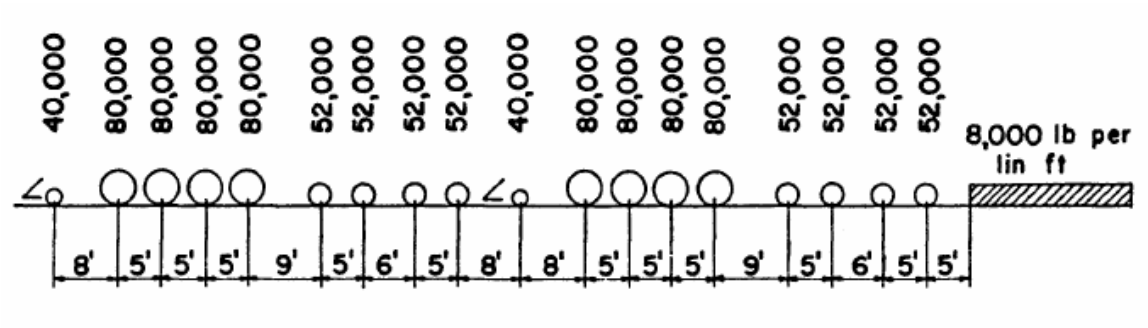

Figure 15 - Cooper E-80 Design Load

The load ratings are expressed in terms that relate to the Cooper E series of axle live loadings. The Cooper E loading is used to compare the rating values for each structural element of a bridge. The use of the Cooper E loading is convenient since it is used by nearly all railroads to design new bridges and it provides a rational basis for the comparison of rating values.

Load Rating Criteria:

The 2005 American Railway Engineering and Maintenance-of-Way Association (AREMA) Manual for Railway Engineering is the design criteria used for the bridge load ratings. Chapter 15, Section 7.3 addresses load ratings of steel bridges.

The bridges were rated for Normal Rating, which is the load level which can be carried by the existing structure for its expected service life. The rating is dependent on a specific speed, as impact reductions are allowed for reduced speeds. A 25mph speed was

assumed for the Normal Rating calculations based on the potential for this line to operate at this speed sometime in the future. The current track for the Santa Cruz Industrial Lead is classified as excepted track and per FRA regulations the speed of freight operations over this line is limited to 10mph. If the actual speed is to remain at the current 10mph level the load ratings of the structures would increase due to a reduction in the impact loading that is factored into the rating analysis.

Longitudinal Loading Criteria:
Longitudinal loading is based on the 1996 American Railway Engineering Association (AREA) Manual for Railway Engineering, Chapter 15.

Fatigue Evaluation:
A fatigue evaluation was not performed for the bridges. Per the AREMA Manual, a bridge carrying less than 5 million gross tons per annum of usual mixed traffic throughout its existing and projected life and without details with an allowable stress range lower than Category D (Category D or lower is a stress category where the allowable fatigue stress range has been limited due to the type of detail), a fatigue evaluation is not necessary. If the bridge does contain details with an allowable stress range lower than Category D, a fatigue evaluation is not required if adequate inspection procedures are in place for those details[4]. Data provided for the study and historical records indicate that the inspection procedures are taking place and the annual gross tonnage operating over the line was well below the threshold amount listed above. The annual gross tonnage over the line, per information received, has been indicated as being 3,805 loaded cars with a total of 0.383 million gross tons of lading.

Equivalent Ratings for Equipment Currently Used

All rail lines are usually rated for the maximum car weight that can operate for unlimited free running of locomotives and cars. Currently the Santa Cruz Industrial Lead has a rail car loaded weight limit of 268,000 pounds. As reference the current weight for four-axle rail car in unrestricted interchange is 286,000 pounds, in general most lines on Class 1 railroads are capable of handling that weight, but many branch lines, industrial leads, and short lines have weight capacities below the interchange standard weight. Prior to the 286,000 pound weight the previous unrestricted interchange weight was 263,000 pounds.

Several factors (or a combination of factors) may limit the load carrying weight capacity of a rail line which may be the track structure or track substructure conditions, alignment and grade may limit axle weights or limit the types of rail car equipment operated over a rail line. Also, the restriction on weight limit may come from the allowable load carrying weight capacity of the bridges.

The equivalent ratings for the typical rail car equipment were developed for the following equipment:

- Typical 4 axle locomotive of 260,000 pounds, three locomotives together
- Typical 4 axle 263,000 pound rail car consisting of 10 cars

[4] 2005 AREMA Manual for Railway Engineering, Chapter 15 Section 7.3.4.2.

- Typical 4 axle 268,000 pound rail car consisting of 10 cars
- Typical 4 axle 286,000 pound rail car consisting of 10 cars

The four axle car used in this study for each of the load cases had a length over the pulling faces of the couplers of 53.08 feet, truck centers of 40.5 feet, and a truck axle spacing of 5.83 feet. As this rail line handles mixed freight not all rail cars will match the dimensions used in the study. The structures analyzed have been compared to the 268,000 pound railcar equivalent equipment rating as this is the load limit currently in place on the Santa Cruz Industrial Lead and the 286,000 pound rail car equivalent equipment rating with 10 like cars coupled together.

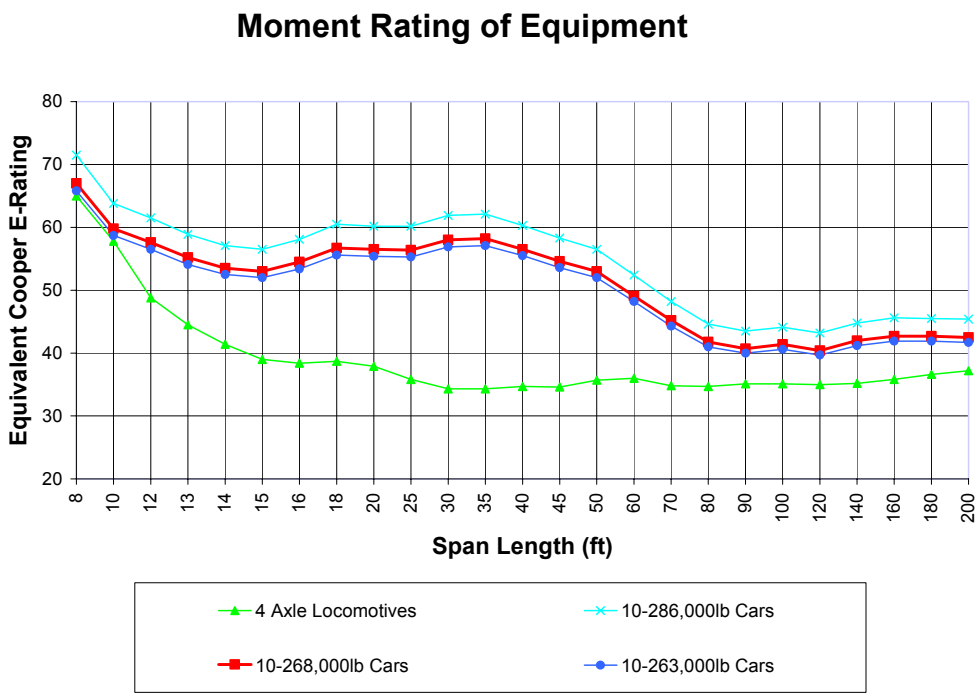

Figure 16 - Moment Rating of Equipment

Figure 16 shows a typical chart developed for the bending moment equivalent rating of equipment verses span length for a simple span. Typical charts like this or calculations were made for individual bridge components to compare to the load capacity (E-Rating) of the member to determine if the structural member was within the limits for the loading it is carrying.

It should be noted that this line handles mixed freight and not all cars will have the same dimensions or loaded weights. Some cars will be empties and some cars will have loaded weights which vary from the adjacent car. The equipment rating numbers will have some variations based on this distribution of freight service. The equipment rating used in the study (10 loaded cars to the 268,000 or 286,000 weight) should be considered an upper bound as the actual freight car distribution and loading conditions may vary.

Analysis Methods for Steel Bridges

The load ratings for the steel bridges were calculated by hand calculations and spreadsheets taking into account the section property losses presented in the inspection report. Typically, load ratings were calculated for the primary floor system members including the stringers, floor beams, and girders.

The 5-60' through plate girder spans at the Pajaro River (MP 1.06b), the 9 deck plate girder spans at Leonard Gulch (MP 9.09), and the 60' deck plate girder span at San Lorenzo River were rated by performing hand calculation taking into account the section losses developed from the inspection. The grade of steel used for the rating was assumed to have a yield stress of Fy = 30,000psi. Allowable Stress for Normal Rating was 0.55Fy

The deck truss at the Soquel River Crossing (MP 15.89c) was rated using a finite element program (RISA). A representative model was created that incorporated the estimated section losses as described in the inspection report. The grade of steel used for the analysis of the truss, floor beams and stringers was assumed to have a yield stress of Fy = 33,000 psi. Allowable Stress for Maximum Rating was 0.8Fy (ref AREMA Section 7.3.4.3, Chapter 15) and for Normal Rating was 0.55Fy.

The 120'-0" through trusses at the San Lorenzo River Crossing (MP 19.43a) were rated using a truss rating and analysis program (TRAP version 6.7). Two independent analysis runs were performed, one for Maximum Rating and one for Normal Rating. A representative model of both trusses was built that incorporated estimated section losses as described in the inspection report. The grade of steel was assumed to have a yield stress of Fy = 35,000 psi. Allowable Stress for Maximum Rating was 0.8Fy (ref AREMA Section 7.3.4.3, Chapter 15) and for Normal Rating was 0.55Fy. Impact was determined from AREMA Section 7.3.3.3 b. impact for truss spans.

Summary of Steel Bridge Load Ratings Versus Equipment Loads

Location (Bridge No./ Milepost)	Structure	Calculated Normal Load Rating (25 mph)	Equivalent Ratings for 268,000 lb rail cars	Equivalent Ratings for 286,000 lb rail cars
MP 1.06b	Pajaro River Crossing	E-72.9 (Floor Beam)	E-57.0	E-60.8
MP 9.09	La Selva Beach Trestle (Leonard Gulch)	E-45.2 (Bent 4) E-65.0 (Girders)	E-43.7 E-49.1	E-46.6 E-52.4

Location (Bridge No./ Milepost)	Structure	Calculated Normal Load Rating (25 mph)	Equivalent Ratings for 268,000 lb rail cars	Equivalent Ratings for 286,000 lb rail cars
MP 15.89c	Capitola Crossing – Pinned Deck Truss	E-36.6 (Floor Beams) E-57.5 Maximum E-37.7 (Stringers) E-57.7 Maximum E-65.1 Maximum @ 10mph E-70 (Truss)	E-49.2 E-56.6 E-29	E-52.5 E-60.4 E-30.9
MP 19.43a	San Lorenzo River – Through Warren Truss	E-57.6 (Truss) E-72 (Floor Beams)	E-42.1 E-56.3	E-45.0 E-60.1
MP 19.43b	San Lorenzo River – Deck Girder	E-75.1 (Girders)	E-49.6	E-52.9

Table 6 - Summary of Steel Bridge Load Ratings Versus Equipment Loads

Table 6 summarizes the findings of the analysis of the steel bridges. The analysis process considers all the structural members in the structure and develops an E rating for each bridge member. Only the lowest controlling E values for a specific bridge member in the structure have been shown, as this will control the load capacity of the bridge. The E-rating values for the other members for each structure are shown in the Appendix. Values summarized in the Table are Normal Load rating values for a 25 mph operating speed unless otherwise shown.

For each instance where the equivalent equipment rating is lower than the Normal Load rating the current freight service over the steel bridges can remain at current levels. It should be noted that the Normal Load rating has been developed for 25 mph and that using the current operating speed of 10 mph the Normal load rating would give a higher rating value. Also, once a member is repaired its E rating will increase and the next lowest E rated member in the bridge will control the structure's load capacity.

In addition to the Normal Load rating for a bridge it will also have a Maximum Load rating that can be calculated. The Maximum Load rating is defined as the load level that a structure can support at infrequent intervals considering the speed reductions on the bridge. More frequent load levels up to the Maximum rating may shorten the useful life of the bridge. The loading of a bridge between the Normal Load rating and the Maximum Load rating may require more frequent inspections and an increase in maintenance for the bridge.

It should be noted that for the structure at MP 15.89c the equivalent rating for the 286,000 lb cars (E-60.4) exceeds the Normal (E-37.7) and Maximum (E-57.7) Load ratings for the stringers, based on a 25 mph operating speed. For a 10 mph operating

speed, the Maximum Load rating increases to E-65.1. In order to keep the bridge stresses to within the Maximum Load rating, it is recommended that operating speeds not exceed 10 mph. More frequent inspection intervals are also recommended for this bridge due to the possibility that this bridge may be consistently loaded above the Normal and Maximum Load rating.

The load rating for the MP 9.09 Leonard Gulch (La Selva Beach Trestle) is dependent upon the condition of the column longitudinal and transverse bracing and the bracing connections. Some of these items were observed to be in poor condition, with significant corrosion and section loss. Failure of the bracing or connections may lead to a reduced load rating and the possibility of column failure. As noted in Section 9 of this report, the bracing and connections should be replaced in the near future in order to avoid possible column failure.

Analysis Methods for Timber Bridges

The timber bridge stringers were analyzed using a spreadsheet program developed for evaluating the condition of timber bridge stringers. The timber stringer spreadsheet program takes into account the conditions of the stringers, based on recorded stringer conditions from the field inspections as well as UPRR inspection records for the stringers. The program provides numerical indices for bending, shear, bearing, and deflection for the left and right chords of the stringer span being analyzed. Indices for the "no damage" and "damaged" conditions are calculated, and average values for each bridge are reported in the summary results. Large variations in the "no damage" and "damaged" indices indicate increased levels of damage to the stringers, decreased load carrying capacity, and increased need for stringer replacement. A "no damage" condition relates to a condition that is like new. A "damage" condition is a stringer that has some type of condition defect that was identified during the inspection and has been classified by type and severity. Typical stringer type defects include interior decay, top or bottom section loss, side or vertical split, crushing, horizontal splits, etc. Each of these types has been further classified by their severity.

Summary of Timber Bridge Stringer Condition

Location (Bridge No./ Milepost)	Structure	Evaluation Index of Stringers
MP 10.45	Seascape Trestle – 16 span Ballast Deck Timber Trestle	No Damage 78.6 Damaged 74.5
MP 15.89b	Capitola Crossing – 15 span Open Deck Timber Trestle	No Damage 59.6 Damaged 56.1
MP 15.89d	Capitola Crossing – 3 span Open Deck Timber Trestle	No Damage 57.0 Damaged 51.9
MP 23.54	Meder Creek Crossing – 1 span Open Deck Timber Trestle	No Damage 54.0 Damaged 36.0

Table 7 - Summary of Timber Stringer Condition

Table 7 summarizes the stringer condition for use in planning for future bridge replacement and stringer rehabilitation. For the bridges at 10.45, 15.89b, 15.89d, the damaged conditions are within 90 percent of the no damage condition. For the bridge at 23.54 the variation is within 67 percent of the no damage condition due to one of the stringers having a low inspection rating for this single span bridge. Upon further examination of the inspection records it was determined that the condition causing the low value was skewing the index results for this single span structure, and that it is within acceptable limits when the latest changes in the 2006 AREMA Manual are accounted for.

The inspection of the timber structures included along with the stringer inspection the inspection of other timber components consisting of the piling, caps, and bracing members. This inspection was verified against the records of the UPRR Bridge Book containing the condition of these various timber components. Based on the condition of the timber members in the inspection the current freight service over the timber structures can remain at current levels. The following sections on the recommended repairs and the repair cost estimate outline the repairs to the timber bridges to keep the bridges within their load limits for continued service. It is quite common with timber railroad structures to replace individual components such as stringers, caps, and bracing members and to repair piles as necessary until the funding can be made available for total replacement.

Analysis Methods for Concrete Bridges

The concrete bridges were constructed in 1970, and are relatively new when compared to the steel and timber bridges included in this assessment. Because these bridges are newer and were previously reported to be in good condition, they were excluded from the scope of this assessment of performing a load rating for the concrete bridges. No load rating calculations were performed for the concrete bridges; however the as-built drawings for the concrete bridges indicate that the bridges were designed for Cooper E-72 loading.

Summary of Concrete Bridge Design Loads Versus Equipment Loads

Location (Bridge No./ Milepost)	Structure	Design Live Load	Equivalent Ratings for 268,000 lb rail cars	Equivalent Ratings for 286,000 lb rail cars
MP 15.89a	Capitola Crossing – Prestressed Concrete Girder	E-72 (Design)	E-59.8 (30' span) E-48.1 (60' span)	E-63.8 (30' span) E-51.3 (60' span)
MP 15.89e	Capitola Crossing – Prestressed Concrete Trough	E-72 (Design)	E-45.2	E-48.2

Table 8 - Comparison of Concrete Bridge Design Loads Versus Equipment Loads

In the comparison table above (Table 8), the equivalent equipment loads currently carried by the bridges are lower than the loads for which the bridges were designed. No significant structural damage was observed in the concrete structures that would limit the load carrying capacity of the structure. Current freight service over the concrete structures can remain at current levels.

Summary of Retaining Wall Condition

The retaining walls at MP 4.45, MP 8.64, and MP 9.3 were inspected for their condition and to determine their risk to operations of the railroad. The retaining walls at MP 4.45 and MP 9.3 are in satisfactory condition. There is no recommended repair work for these walls, only the yearly inspection and maintenance functions should be followed to keep them in satisfactory condition.

The condition of the retaining wall at MP 8.64 was in a poor condition at the time of the inspection. This retaining wall supports the embankment for the track roadbed and its close proximity to the track poses a potential risk to rail operations although at the time of the inspection there was no deviation in line or surface of the track and the track appeared stable. Also, the UPRR had a contractor in the area making repairs to the drainage and the retaining wall at this location. It is recommended that a follow up inspection be made to verify the extent of repairs made and if further repairs need to be made. Recommended repair work includes repairs noted at the time of the inspection. The

recommended repairs include 260 feet of reconstructed retaining wall and the restoration of the drainage ditch along the track roadbed.

8. Seismic Vulnerability Analysis (San Lorenzo River Crossing)

The San Lorenzo River Crossing (MP 19.43a & MP 19.43b) currently has a heavily used public walkway attached to the bridge structures. The July 2005 Structural Assessment recommended that seismic vulnerability studies be conducted for structures that may carry future passenger service or may be used for a future trail, in order to mitigate potential risks. This section of the report identifies seismic vulnerabilities, preliminary retrofit concepts, and anticipated retrofit construction costs for the San Lorenzo River Crossing.

Background

The San Lorenzo River crossing is composed of 3 spans. The southern and middle spans are 120 foot riveted through truss, Warren type. The northern span is a 60 ft - 3 inch steel deck plate girder. The bridge was constructed in 1904 per the UPRR records.

The April 1-2, 2006 inspection revealed that the bridge was generally in fair to marginal structural condition, with up to 15% section loss in the main truss members, some section loss in floor beams and stringers, and up to 100% section loss at many lateral braces.

The bridge has survived the 1906 San Francisco Earthquake. The effect of this and other earthquakes including the 1989 Loma Prieta Earthquake can be seen from the northward movement of the bridge superstructure relative to the piers and the bending of the anchor bolts.

Seismic Vulnerability

The seismic vulnerabilities were identified based on the review of available existing plans, shop drawings, field inspection reports and the theory presented in Chapter 9 of 2004 AREMA. The cost was estimated based on experience drawn from similar projects. No detailed calculations were performed for seismic forces or member capacities due to the lack of geotechnical data and the severe section loss on many of the elements of the structure.

The primary seismic vulnerability of the truss and deck plate girder includes failures of the bearings from shearing and sliding with possible unseating of the superstructure and the public walkway from the abutments and piers. It was noted in the field inspection that the anchor bolts at the bridge bearings were bent to the north. There is also a noticeable shift of the public walkway girder bearing at Pier 3. Additional seismic vulnerabilities include the potential for localized failures of the truss members and/or floor system, and foundation rocking or failure of the piles supporting the piers.

Preliminary Retrofit Concepts

As a prerequisite for the seismic retrofit, all the truss members, floor beams, stringers, and walkways will need to be either repaired or replaced for service load. Other deficient members for seismic forces are identified as following:

Bearing Assembly
The bearing assemblies and anchor bolts are severely corroded and damaged. The bearings may be sheared off under the design earthquake. As a retrofit measure, a bearing replacement is required. In order to minimize the seismic forces that will be transferred to the minimally reinforced piers, earthquake isolation bearings are recommended. The isolation bearings will serve to minimize the forces to the pier and foundation system so that a substructure retrofit can be avoided.

Lateral Bracing System
It is unlikely that the current bracing system will resist the seismic design forces. In addition, most members of the lateral bracing system have shown a significant section loss due to corrosion and other effects. The entire lateral bracing system – top and bottom laterals, top strut and sway (knee) bracing and bottom bracings and portal bracing – will likely need to be repaired or heavily retrofitted.

Retrofit Recommendations and Cost

Retrofit of old truss members is a labor intensive and expensive operation which includes removing old rivets and repairing lacing members. The construction cost shown in the table below is an estimate for the cost that is needed to bring the truss spans to the current seismic design standards. The cost was divided into two portions – cost for service load repair and cost for seismic retrofit. The service load repairs must be completed either before or at the same time that the seismic retrofit repairs are completed.

Cost for Service Load Repair

Items	Unit	Unit Cost	Cost	Cost/Foot
Truss Repair	4	$50,000	$200,000	
Floor Beams	14	$2,000	$28,000	
Stringers	24	$1,000	$24,000	
Walkway Repair	2	$20,000	$40,000	
Sub-Total			$292,000	$973

Cost for Seismic Retrofit

Items	Unit	Unit Cost	Cost	Cost/Foot
Isolation Bearings	8	$40,000	$320,000	
Portal Bracing	4	$6,000	$24,000	
Top Laterals	16	$4,000	$64,000	
Top Strut/Sway Bracing	6	$5,000	$30,000	
Bottom Laterals	24	$4,000	$96,000	
Bearings (MP 19.43b)	6	$10,000	$60,000	
Sub-Total			$594,000	$1,980
Total			$886,000	$2,953

Other Project Costs associated with the Cost for Service Load Repair and Cost for Seismic Retrofit are $113,900 and $231,700 respectively. The total Other Project Costs

would be $345,600. See the description of Other Project Costs for Table 9, Note 6 below.

The costs above may be used in a life cycle cost analysis to fully evaluate the value of retrofit verses replacement. For comparison a through-plate-girder or deck girder span could be used to replace the 120 foot truss spans and the 60 foot deck girder span. These replacement structures have a rough cost for superstructure replacement of approximately $8,500 per track foot, approximately $2,550,000 for the two 120 foot spans and the 60 foot deck girder span, as compared to about $886,000 for the seismic and service retrofit. An additional $6,000 per track foot, or $1,800,000, for substructure would be required if the substructure is to be replaced. The total replacement cost for the 300 foot bridge would be about $4,350,000.

9. Description of Needed Repairs

A summary of needed repairs is described in this section, based on the visual field inspections and bridge load ratings. This list contains general recommendations for 1) Recommended Repair Work, 2) Optional Work, and 3) Maintenance Program. The items in the Recommended Repair Work include items to address general bridge maintenance items as well as items that affect load rating.

MP 1.06b Pajaro River Crossing (Steel - Through Plate Girder)
General • UPRR recently (8/03/05) made repairs to the timber approaches to this structure
Recommended Repair Work • Clean bearings • Repair holes in girder webs
Optional Work • Repair foundation support at the beginning of span one, west end (located at 4-pile H bent added in 1989) • Clean and paint structural steel • Graffiti removal • Seismic retrofit
Maintenance Program • Bi-annual bridge inspection • Although inspection of the timber approaches were not a part of scope there was some slight fire damage noted to spans 1 through 4 of the timber at the low MP bridge end, also a steel angle support bracket is attached to the caps at bents 7, 8, 10, 11, 12 that was added for stringer support, it is recommended to continue to monitor condition of caps and stringer support

MP 9.09 Leonard Gulch (La Selva Beach Trestle – Steel Deck Plate Girder)
General • UPRR recently (8/22/05-2/09/06) made repairs to the steel bents for this structure
Recommended Repair Work • General repairs to columns to fix areas of significant section loss • Repairs to Bent 4 columns • Repairs to Bent 2 columns • Replace severely corroded longitudinal bracing for selected members at Bents 3-4, Bents 5-6, and Bents 7-8 • Replace severely corroded transverse bracing members at selected Bents • Replace severely corroded lacing bars in selected columns • Replace selected girder bottom laterals and connection plates • Replace selected girder top laterals and connection plates • Replace selected girder cross frames • Repair girder bottom flanges and webs where corrosion occurs at cross frames and bearings • Replace corroded rivets, bolts, etc.
Optional Work • Clean and paint substructure steel • Seismic retrofit • Replace missing catwalk timbers
Maintenance Program • Bi-annual inspection of bridge • Replacement program for girder top and bottom laterals • Annual cleaning and inspection of girder bearings • Annual inspection of retaining walls along channel under structure • Replacement program for retaining wall timbers and soldier piles along channel

MP 10.45 Seascape Trestle (Ballast Deck Timber Trestle)
Recommended Repair Work • Replace or splice deteriorated piles (4 locations) • Replace selected deteriorated stringers and hardware (4 each) • Replace selected severely deteriorated longitudinal braces and hardware (45% of total) • Replace selected severely deteriorated transverse braces and hardware (40% of total)
Optional Work • None
Maintenance Program • Bi-annual bridge inspection • Stringer replacement program • Pile repair or replacement program • Pile cap replacement program • Longitudinal and transverse bracing replacement program

MP 15.89a Capitola Crossing (Prestressed Concrete Girder)
Recommended Repair Work • Inspect and clean bearings
Optional Work • Seismic retrofit
Maintenance Program • Bi-annual bridge inspection

MP 15.89b Capitola Crossing (Open Deck Timber Trestle)
Recommended Repair Work • Replace selected deteriorated stringers (4 each) • Replace or splice selected deteriorated piles (1 splice) • Replace selected deteriorated bracing and hardware (20%) • Replace missing sill plate hardware
Optional Work • None
Maintenance Program • Bi-annual bridge inspection • Stringer replacement program • Pile repair and replacement program • Pile cap replacement program • Bracing replacement program

MP 15.89c Capitola Crossing (Steel Deck Truss, Pinned)
Recommended Repair Work • Clean and repair bearings, rollers, anchor bolts (4 each) • Replace missing or broken fasteners in girder cross frames and laterals • Repair corrosion in selected top chord members
Optional Work • Seismic retrofit • Clean and paint for extended bridge life
Maintenance Program • Quarterly bridge inspection • Monitor floor system bracing for program repairs • Monitor pin connections for program repairs

MP 15.89d Capitola Crossing (Open Deck Timber Trestle)
General • UPRR recently repaired this section, but may not have completed, monitor final repairs for additional work needed
Recommended Repair Work • Replace deteriorated/missing bracing to concrete pier • Replace selected transverse bracing and hardware • Replace selected damaged stringers (2 each)
Optional Work • None
Maintenance Program • Bi-annual bridge inspection • Stringer replacement program • Pile repair or replacement program • Longitudinal and transverse bracing replacement program

MP 15.89e Capitola Crossing (Prestressed Concrete Trough)
Recommended Repair Work • Inspect and clean bridge bearings • Modify superstructure drainage
Optional Work • Seismic retrofit
Maintenance Program • Bi-annual bridge inspection

MP 19.43a San Lorenzo River Crossing (Steel Through Truss)
Recommended Repair Work • Repair or replace bearings/anchor bolts Pier 2 and Pier 3 • Repair broken cap stone at Pier 3 • Replace selected bottom lateral bracing and connections to truss • Clean out debris from selected lower chord members and gusset plates, re-inspect for corrosion and section loss • Replace lacing bars in selected columns • Replace selected corroded walkway support members for adjacent pedestrian walkway • Repair floor beam web corrosion at stringer connections
Optional Work • Clean and paint structural steel for extended life • Seismic retrofit
Maintenance Program • Bi-annual bridge inspection

MP 19.43b San Lorenzo River Crossing (Deck Plate Girder)
Recommended Repair Work • Inspect and clean bearings • Replace anchor bolt at Pier 3 • Replace walkway girder bearing at Pier 3
Optional Work • Clean and paint structural steel • Seismic retrofit
Maintenance Program • Bi-annual bridge inspection

MP 23.54 Meder Creek (Open Deck Timber Trestle)
General • UPRR recently made repairs to this bridge (timber sill, posted piles, and long. struts, etc.)
Recommended Repair Work • Replace stringer (1)
Optional Work • Investigate elimination of this structure as it is listed as a cattle passage, and does not currently appear to be used. Drainage across the RR right-of-way is carried below this bridge via a tunnel. It may be possible to replace the bridge with a low maintenance large diameter concrete or corrugated metal pipe to preserve the cattle passage if necessary.
Maintenance Program • Bi-annual bridge inspection • Stringer replacement program • Pile repair or replacement program

MP 4.45-4.87 Retaining Wall (Steel Pile and Timber Lagging)
Recommended Repair Work • None
Optional Work • None
Maintenance Program • Annual inspection • Monitor timber lagging for deterioration and establish replacement program as necessary

MP 8.64-9.09 Retaining Walls (Steel Rail Pile & Timber Lagging)
General • UPRR was in the process of making drainage and wall repairs along this section during the inspection. Follow up with additional inspection for any additional repairs that may need to be made
Recommended Repair Work • Replace approximately 260 lf of retaining wall • Restore proper drainage along track roadbed
Optional Work • None
Maintenance Program • Annual inspection of walls

MP 9.3 Retaining Wall (Timber Crib Wall)
Recommended Repair Work • None
Optional Work • Clean graffiti
Maintenance Program • Annual inspection of retaining walls

Structure Service Life

Typically the service life for Railroad structures can be quite long for bridges in the United Sates with many examples stretching well beyond the 100 year mark. The life of each structure can be extended nearly indefinitely with the proper inspection program and with a regular maintenance program that addresses any issues on bridge condition. In the case of the structures on the Santa Cruz Industrial Lead if the recommended repair work is made within a reasonable time frame and if the annual maintenance and inspections are performed the existing level of service can be maintained for an indefinite period of time. For steel and timber structures the various bridge components can be renewed as any defect is identified during the inspections. The concrete bridges while being of more recent construction are a low maintenance structure and with proper inspection and repair will have a long service life.

As with any facility a bridge can become functionally obsolete because of a change in the conditions for which it was designed such as an increase in the amount of traffic or an increase in the operating loading conditions which may require the replacement of the bridge. Also, the cost of maintenance can increase to the point where it may become more advantageous to replace a structure than maintain it. This type of life cycle cost analysis for bridge replacement is beyond the scope of this report.

10. Preliminary Cost Estimates

A summary of the preliminary cost estimate for bridge repairs and annual maintenance are included in this section. Costs provide a broad overview of anticipated levels of expenditures, and the indicated costs should be considered as budgetary numbers rather than firm prices for accomplishing the various work efforts. The cost estimate for recommended repair work is a one time cost intended for the near term (within the next 5 years) to keep the structure within operating limits. Other project costs include "soft costs" including mobilization/demobilization, engineering design, construction management, and project reserve. Annual maintenance cost is the recurring yearly cost to maintain the bridge or structure once the repairs have been made.

Location (Bridge No./ Milepost)	Structure	Estimated Construction Cost of Recommended Repair Work	Other Project Costs
MP 1.06b	Pajaro River Crossing	$30,000 - $36,000	$12,000 - $14,000
MP 9.09	La Selva Beach Trestle (Leonard Gulch)	$816,000 - $1,156,000	$320,000 - $450,000
MP 10.45	Seascape Trestle – 15 span BDT	$120,000 - $192,000	$47,000 - $75,000
MP 15.89a	Capitola Crossing – Prestressed Concrete Girder	$4,000 - $7,000	$2,000 - $3,000
MP 15.89b	Capitola Crossing – 16 span ODT	$43,000 - $69,000	$17,000 - $27,000
MP 15.89c	Capitola Crossing – Pinned Deck Truss	$89,000 - $126,000	$35,000 - $49,000
MP 15.89d	Capitola Crossing – 3 span ODT	$14,000 - $22,000	$6,000 - $9,000
MP 15.89e	Capitola Crossing – Concrete Trough	$3,000 - $4,000	$1,000 – $1,500
MP 19.43a	San Lorenzo River – Through Warren Truss	$192,000 - $288,000	$75,000 - $112,000
MP 19.43b	San Lorenzo River – Deck Girder	$24,000 - $29,000	$9,000 - $11,000
MP 23.54	Meder Creek Crossing	$8,000 - $13,000	$3,000 - $5,000
MP 4.45	Retaining Wall	$0	$0
MP 8.64	Retaining Walls	$40,000-$55,000	$16,000 - $22,000
MP 9.3	Retaining Wall	$0	$0
	TOTALS	$1,383,000- $1,997,000	$543,000 – $778,500

Table 9 - Preliminary Repair Cost Estimates

Table Notes:

1. The level of detail provided is consistent with the programming planning purposes of this Supplemental Structural Assessment Report. All costs should be considered as engineer's opinion of probable costs and subject to change. Actual incurred costs may vary.
2. Costs are stated in 2006 dollars and have not been adjusted for inflation, or escalated to date of expenditure.
3. Costs are based on present conditions and no allowances are included in anticipation of additional deterioration or degradation due to natural or manmade events.
4. Costs do not include any costs for seismic retrofitting of the structures.
5. The previous report notes that the bridge at MP 15.89 is in a historic district and for this report no additional cost are assumed as needed for the recommended repair work because of this.
6. Other Project Costs are based on a percentage of Estimated Construction Cost of Recommended Repair Work, including mobilization/demobilization (10%), design engineering (12%), construction management (12%), and project reserve (5%).

Location (Bridge No./ Milepost)	Structure	Estimated Annual Maintenance Cost	Estimated Annual Other Project Costs
MP 1.06b	Pajaro River Crossing – Thru Plate Girder	$3,000 - $5,100	$1,200 - $2,000
MP 9.09	La Selva Beach Trestle (Leonard Gulch)	$4,400 - $8,000	$1,800 - $3,100
MP 10.45	Seascape Trestle - 16 span BDT	$2,600 - $4,000	$1,000 - $1,500
MP 15.89a	Capitola Crossing – Concrete Girder	$1,000 - $1,400	$400 - $600
MP 15.89b	Capitola Crossing – 15 span ODT	$2,400 - $3,600	$900 – $1,400
MP 15.89c	Capitola Crossing – Pinned Deck Truss	$1,800 - $3,000	$700 – $1,200
MP 15.89d	Capitola Crossing – 3 span ODT	$500 - $700	$200 - $300
MP 15.89e	Capitola Crossing – Concrete Trough	$600 - $900	$200 - $300
MP 19.43a	San Lorenzo River – Thru Warren Truss	$2,600 - $4,500	$1,000 - $1,800
MP 19.43b	San Lorenzo River – Deck Girder	$600 - $900	$200 - $400
MP 23.54	Meder Creek Crossing – 1 span ODT	$200 - $300	$0 - $100
MP 4.45	Retaining Wall	$0 - $300	$0 - $100
MP 8.64	Retaining Wall	$0 - $400	$0 - $100
MP 9.3	Retaining Wall	$0 - $200	$0 - $100
	TOTALS	$19,700 - $33,300	$7,600 - $13,000

Table 10 -Summary of Estimated Annual Maintenance Cost

Table Notes:

1. The level of detail provided is consistent with the programming planning purposes of this Supplemental Structural Assessment Report. All costs should be considered as engineer's opinion of probable costs and subject to change. Actual incurred costs may vary.
2. Costs are stated in 2006 dollars and have not been adjusted for inflation, or escalated to date of expenditure.
3. Costs are based on present conditions and no allowances are included in anticipation of additional deterioration or degradation due to natural or manmade events.
4. The previous report notes that the bridge at MP 15.89 is in a historic district and for this report no additional cost are assumed as needed for annual maintenance work because of this.

5. Estimated Annual Other Project Costs are based on a percentage of annual maintenance costs, including mobilization/demobilization (10%), design engineering (12%), construction management (12%), and project reserve (5%).

11. Conclusions and Recommendations

Bridge Ratings

Based on the comparison of the calculated bridge load ratings and the equivalent ratings for the equipment used on this line, the current freight service over all of the bridges in this report can remain at current levels. For the Capitola Crossing bridge at MP 15.89c, the current operating speed of 10 mph should be retained due to the equipment load rating exceeding the Normal Load rating of the bridge. Detailed information about the load ratings is described in Section 7 of this report.

Recommended Repair Work

The recommended repair work for the structures is described in detail in Section 9 of this report, and in general consists of repairing damaged or decayed structural members, replacing damaged or decayed structural members, and cleaning and repairing bearings. Optional repair work and items for consideration as part of an annual maintenance program are also included in Section 9 of this report.

Repair and Maintenance Costs

The estimated construction cost of recommended repair work for the structures in this supplemental assessment report range from $1,383,000 to $1,997,000, with other project "soft" costs ranging from $543,000 to $778,500. Estimated annual maintenance costs are in the range of $19,700 to $33,300, with associated project "soft" costs ranging from $7,600 to $13,000 annually.

Appendix H: UPRR Comments Not Incorporated into this Report and Responses

Comment from UPRR (Christine Smith) dated 5/24/06:

UP's general reaction to the work recommended by HNTB is that it is directed at placing the facilities in optimum condition rather than serviceable condition.

Response:

The repair work indicated in the report was to bring the structures into a condition where the structure could be maintained in a reasonable manner over an extended period of time with the initial cost of repairs being spread over the first 5 years. -The repair work referred to does not correct every component that needs repairing but only the items deemed most important to the continued rail operations and to the life of the structure.

All other UP comments were incorporated into the final report.

Note: Appendices A - G contain information provided by Union Pacific Railroad and covered under a confidentiality agreement between Union Pacific Railroad Company and the Santa Cruz County Regional Transportation Commission; therefore, they are in a separate confidential volume.